KOBE Brand Range Hood

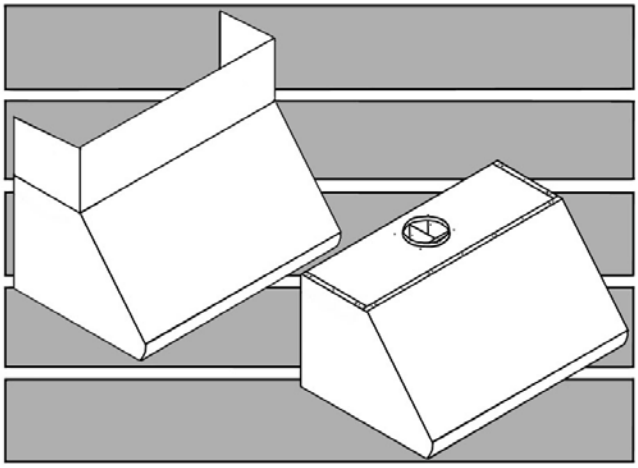

CH-100 Series (18” Height)
Model No.:

- **CH0030SQB-1 (30”)**
- **CH0036SQB-1 (36”)**
- **CH0042SQB-1 (42”)**
- **CH0048SQB-1 (48”)**

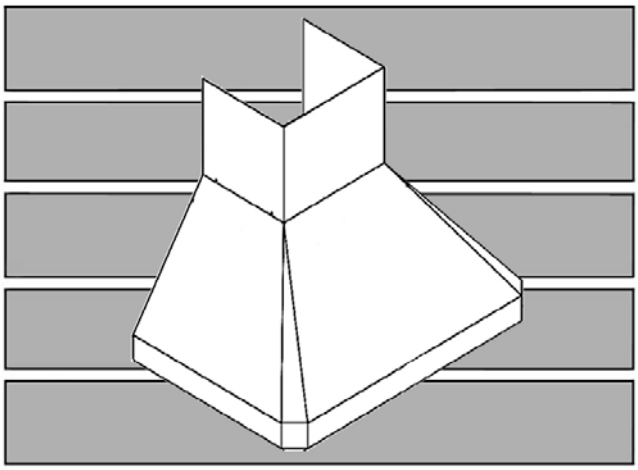

RA-02 Series (18” Height)
Model No.:

- **RA0230SQB-1 (30”)**
- **RA0236SQB-1 (36”)**
- **RA0242SQB-1 (42”)**
- **RA0248SQB-1 (48”)**

INSTALLATION INSTRUCTIONS
AND OPERATION MANUAL

IMPORTANT READ THIS FIRST

READ BEFORE INSTALLATION

1. Carefully check all contents of packages;
2. Thoroughly inspect the unit for any cosmetic damages or defects;
3. Test the unit before installation;
4. Have a certified contractor/electrician do the installation.

IF THERE IS ANY PROBLEM:

1. **DO NOT INSTALL THE UNIT AND KEEP ALL ORIGINAL PACKAGING MATERIAL.**
2. Have your original proof of purchase and product serial number ready.
3. Call 1-877-BUY-KOBE (289-5623); or e-mail to info@koberangehoods.com to report the problem.

NO RETURN, NO REFUND, NO EXCHANGE IF:

1. **PRODUCT HAS BEEN INSTALLED**
2. **KNOCK-OUT HOLES HAVE BEEN PUNCTURED**
3. **MISSING ORIGINAL PACKAGING MATERIAL AND/OR PARTS**

- READ AND SAVE THESE INSTRUCTIONS -

CONTENTS

IMPORTANT SAFETY INSTRUCTIONS 3
COMPONENTS OF PACKAGE 5
INSTALLATION 7
OPERATION INSTRUCTIONS 17
MAINTENANCE 18
SPECIFICATIONS 19
MEASUREMENTS & DIAGRAMS 21
PARTS LIST 24
CIRCUIT DIAGRAM 30
TROUBLE SHOOTING 31
WARRANTY 32
PRODUCT REGISTRATION 34

- READ ALL INSTRUCTIONS CAREFULLY BEFORE STARTING -

ALL WIRING MUST BE DONE BY A PROFESSIONAL AND IN ACCORDANCE WITH NATIONAL AND LOCAL ELECTRICAL CODES.

C US
221547

IMPORTANT SAFETY INSTRUCTIONS

- PLEASE READ THIS SECTION CAREFULLY BEFORE INSTALLATION -

⚠WARNING: **TO REDUCE THE RISK OF FIRE, ELECTRIC SHOCK OR PERSONAL INJURY, OBSERVE THE FOLLOWING:**

1) Installation and electrical wiring must be done by qualified professionals and in accordance with all applicable codes and standards, including fire-rated construction.
2) When cutting or drilling into wall or ceiling, be careful not to damage electrical wiring or other hidden utilities.
3) Ducted fans must be vented to the outside.
   a) Before servicing or cleaning unit, open the light panel and SWITCH POWER OFF AT SERVICE PANEL.
   b) Clean all grease laden surfaces frequently. To reduce the risk of fire and to disperse air properly, make sure to vent air outside. DO NOT vent exhaust air into wall spaces, attics, crawl spaces or garages.

NOTE - This warranty is invalid without an authorized agent's receipt or if unit is damaged due to misuse, poor installation, improper use, mistreatment, negligence or any other circumstances beyond the control of KOBE RANGE HOODS authorized agents. Any repair carried out without the supervision of KOBE RANGE HOODS authorized agents will automatically void the warranty.

- KOBE RANGE HOODS will not be held responsible for any damages to personal property or real estate or any bodily injuries whether caused directly or indirectly by the range hood.

⚠WARNING: TO REDUCE THE RISK OF PERSONAL INJURY IN THE EVENT OF A RANGE TOP GREASE FIRE:

1. Keep all fan, baffle/spacer/filter/oil tunnel/oil container and grease-laden surfaces clean. Grease should not be allowed to accumulate on fan, baffle/spacer/filter/oil tunnel/oil container.
2. Always turn hood ON when cooking.
3. Use high settings on cooking range ONLY when necessary.
4. Do not leave cooking range unattended when cooking.
5. Always use cookware and utensils appropriate for the type and amount of food prepared.
6. Use this unit only in the manner intended by the manufacturer.
7. Before servicing, switch power off at service panel and lock service panel (if possible) to prevent power from switching on accidentally.
8. Clean ventilating fan frequently.

What to Do In The Event Of a Range Top Grease Fire

- SMOTHER FLAMES with a tight fitting lid, cookie sheet, or metal tray, and then turn off the burner. KEEP FLAMMABLE OR COMBUSTIBLE MATERIAL AWAY FROM FLAMES. If the flames do not go out immediately, EVACUATE THE AREA AND CALL THE FIRE DEPARTMENT or 911.
- NEVER PICK UP A BURNING PAN – You May Get Burned.
- DO NOT USE WATER, including wet dishcloths or towels – a violent steam blast will result.
- Use an extinguisher ONLY if:
  a) You have a Class A, B, C extinguisher and know how to operate it.
  b) The fire is small and contained in the area where it started.
  c) The fire department has been called.
  d) You can fight the fire with your back to an exit.

What to Do If You Smell Gas

- Extinguish any open flame.
- Do not try to turn on the lights or any type of appliance.
- Open all doors and windows to disperse the gas. If you still smell gas, call the Gas Company and Fire Department right away.

⚠CAUTION

1) For general ventilation use only. Do not use to exhaust hazardous or explosive materials and vapors.
2) To reduce the risk of fire, use only metal ductwork. Sufficient air is needed for proper combustion and exhausting of gases through the flue (chimney) to prevent back drafting.
3) Follow the heating equipment manufacturer's guideline and safety standards such as those published by the National Fire Protection Association (NFPA), and the American Society for Heating, Refrigeration and Air Conditioning Engineers (ASHRAE), and code authorities.
4) Activating any switch on may cause ignition or an explosion.
5) Due to the size and weight of this hood, two people installation is recommended.

⚠ WARNING

ELECTRICAL SHOCK HAZARD – Can result in serious injury or death. Disconnect appliance from electric power before servicing. If equipped, the fluorescent light bulb contains small amounts of mercury, which must be recycled or disposed of according to Local, State, and Federal Codes.

COMPONENTS OF PACKAGE

(Must keep all material for returns or refunds)

CH-100 Series
RANGE HOOD BOX

{A} KOBE Range Hood – 1
{B} Warranty Registration Card –1
{C} Instructions Manual – 1
{D} Oil Tunnel – 1
{E} Baffle Filter
- 2 (30” & 36”)
- 3 (42” & 48”)

{F} Spacer – 2
{G} 8” Round Exhaust Plate – 1
(42” & 48” only)
{H} Screws Package – 1
{I} Hood-Mounting Bracket – 2
{J} Screws Package – 1

{A}

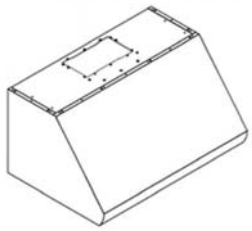

{B}

{C}

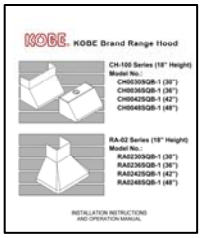

{D}

{E}

{F}

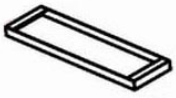

{G}

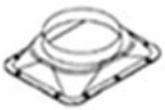

{H}

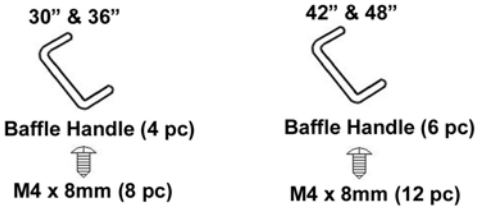

{I}

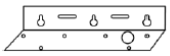

{J}

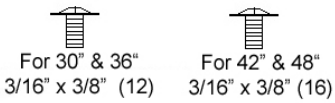

Duct Cover
(Sold Separately)

Option Of:

Model No. CH0030DC-12 for 30'' hood
KOBE Duct Cover – 1
Screw Package for Duct Cover – 1

Model No. CH0036DC-12 for 36'' hood
KOBE Duct Cover – 1
Screw Package for Duct Cover – 1

Model No. CH0042DC-12 for 42'' hood
KOBE Duct Cover – 1
Screw Package for Duct Cover – 1

Model No. CH0048DC-12 for 48'' hood
KOBE Duct Cover – 1
Screw Package for Duct Cover – 1

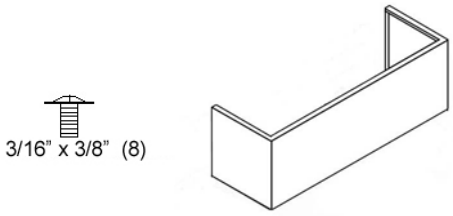

RA-02 Series
RANGE HOOD BOX
(BOX 1 OF 2)

{A} KOBE Range Hood – 1
{B} Warranty Registration Card –1
{C} Instructions Manual – 1
{D} Oil Tunnel – 1
{E} Baffle Filter
- 2 (30” & 36”)
- 3 (42” & 48”)

{F} Spacer – 2
{G} 8” Round Exhaust Plate – 1
(42” & 48” only)
{H} Screws Package – 1
{I} Hood-Mounting Bracket – 1
{J} Screws Package – 1

{A}

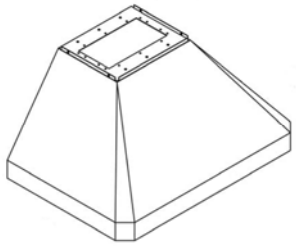

{B}

{C}

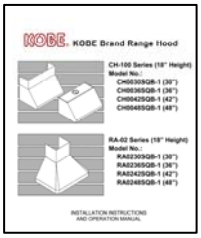

{D}

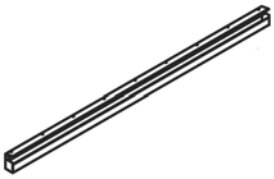

{E}

{F}

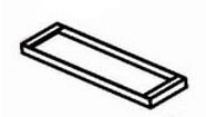

{G}

{H}

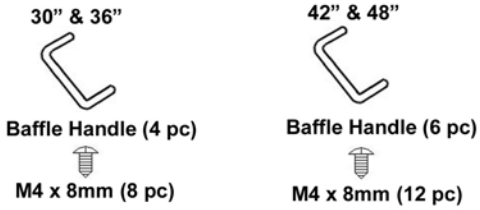

{I}

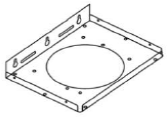

{J}

BOX 2 OF 2
ITEM NO.: RA02DC

{K} Duct Cover

{K}

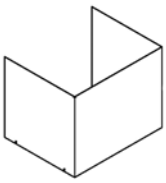

- FOR MORE INFORMATION, PLEASE VISIT OUR WEBSITE **www.KOBERangeHoods.com** OR CONTACT KOBE RANGE HOODS AT (626) 775-8880.

INSTALLATION

PLEASE READ ENTIRE INSTRUCTIONS BEFORE PROCEEDING

Calculation before Installation

Calculate the length of the installation, before installing the hood. (All calculation is measure in inches.)

- FOR UNDER THE CABINET -

TABLE 1

A = Height of Floor to Ceiling
B = Height of Floor to Counter Top
(Standard: 36”)
C = Preferred Height of Counter Top to Hood Bottom
30” & 36” Hood (Recommended 27” to 30”)
42” & 48” Hood (Recommended 30” to 36”)
D = Height of Hood
E = Height of the Cabinet

CH-100 Series

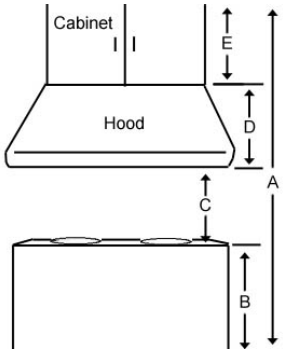

- FOR STAND ALONE -

TABLE 2

A = Height of Floor to Ceiling
B = Height of Floor to Counter Top
(Standard: 36”)
C = Preferred Height of Counter Top to Hood Bottom
30” & 36” Hood (Recommended 27” to 30”)
42” & 48” Hood (Recommended 30” to 36”)
[(A – B] – (D + E)]
D = Height of Hood
E = Height of Duct Cover

CH-100 Series **RA-02 Series**

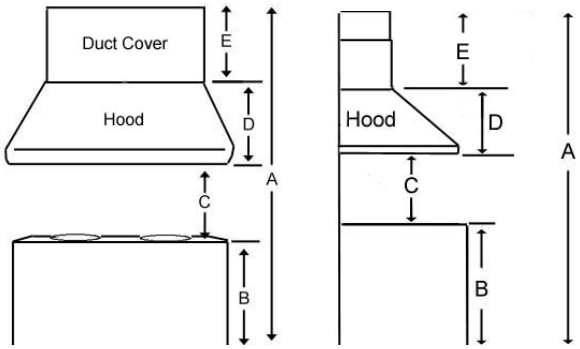

SAFETY WARNING

HOOD MAY HAVE VERY SHARP EDGES; PLEASE WEAR PROTECTIVE GLOVES IF IT IS NECESSARY TO REMOVE ANY PARTS FOR INSTALLING, CLEANING OR SERVICING.

NOTE: BE CAREFUL WHEN USING ELECTRICAL SCREWDRIVER, DAMAGE TO THE HOOD MAY OCCUR.

CH-100 SERIES – UNDER THE CABINET INSTALLATION 9
CH-100 SERIES – STAND ALONE INSTALLATION 11
RA-02 SERIES - INSTALLATION.....14

CH-100 SERIES – UNDER THE CABINET INSTALLATION

Preparation before Installation

NOTE: TO AVOID DAMAGE TO YOUR HOOD, PREVENT DEBRIS FROM ENTERING THE VENT OPENING.

- Decide the location of the venting pipe from the hood to the outside. Refer to Figure 1.
- A straight, short venting run will allow the hood to perform more efficiently.
- Try to avoid as many transitions, elbows, and long run as possible. This may reduce the performance of the hood.
- Temporarily wire the hood to test for proper operation before installing.
- **Important: Peel protective film off the hood (if any).**
- For installing under the cabinet with recessed bottom, attach 4-inch wide wood filler strips (not included) on each side. Refer to Figure 2.
- Measure and create access opening for electrical wires under the cabinet.

Hood Installation

CAUTION: If required to move the cooking range to install the hood, turn off the power on an electric range at the main electrical box. SHUT OFF THE GAS BEFORE MOVING A GAS RANGE.

1. Puncture the knockout holes on the hood as shown in Figure 3.
2. (This step only applies to 42" and 48" models.) Attach exhaust plate on hood with four (3/16" x 3/8") screws (included). Shown in Figure 4.
3. Using references on Table 1 and measurements on page 21 center the hood in place beneath the cabinet and flush with the front of the cabinet.
4. Draw electrical wires through cabinet access opening. Refer to Figure 6.
5. From the bottom of the hood, place screw (not provided) into the exact center of each knockout hole. Make sure all screws are in place before tightening screws. **CAUTION: MAKE SURE THE HOOD IS SECURE BEFORE RELEASING**.
6. For safety purpose, pre-drilled mounting holes are provided through the back of the hood. For a more secure installation, use as many mounting holes as needed to secure from the inside of hood (screws not included).

Figure 1

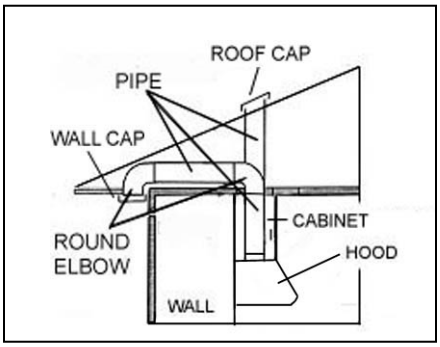

Figure 2

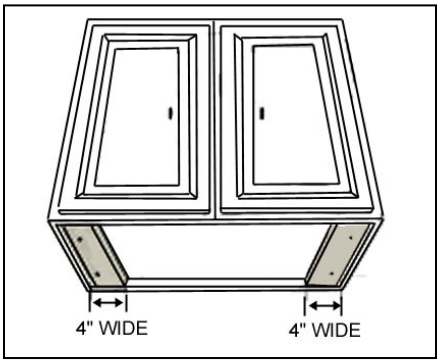

Figure 3

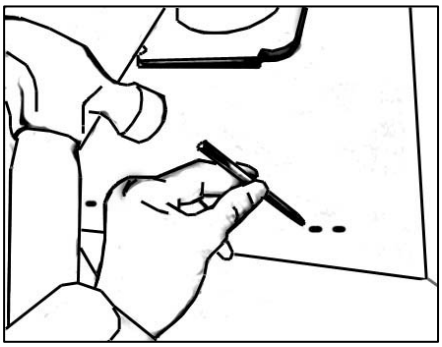

Figure 4

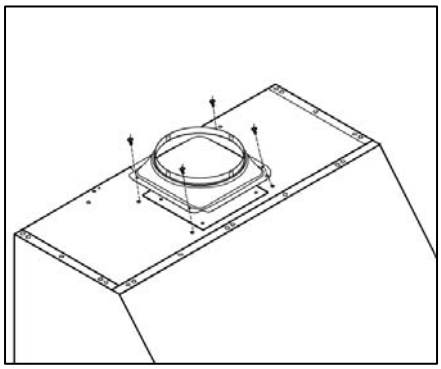

Ductwork Installation

7. Use 6” round steel pipe for 30” and 36” models or 8” round steel pipe for 42” and 48” models (follow building codes in your area) to connect the exhaust on the hood to the ductwork above. Use duct tape to make all joints secure and air tight. Refer to Figure 5.

Wiring to Power Supply

SAFETY WARNING

RISK OF ELECTRICAL SHOCK. THIS RANGE HOOD MUST BE PROPERLY GROUNDED. MAKE SURE THIS IS DONE BY SPECIALIZED ELECTRICIAN IN ACCORDANCE WITH ALL APPLICABLE NATIONAL AND LOCAL ELECTRICAL CODES. BEFORE CONNECTING WIRES, SWITCH POWER OFF AT SERVICE PANEL AND LOCK SERVICE PANEL TO PREVENT POWER FROM BEING SWITCHED ON ACCIDENTALLY.

8. Connect the electrical wires.
   - Connect three wires (black, white and green) to house wires and cap with wire connectors. Connect according to color: black to black, white to white, and green to green as shown on Figure 6.
   - If necessary to hide the electrical wire connections, push wires back into the wiring box. Access the wire connections underneath the hood. To prevent any damage, make sure wires do not slip between motor or any moving parts.

Install Accessories

9. Attach Oil Tunnel. Refer to Figure 7.
10. Refer to Figure 8. ① Slide the baffle filter into the hood. ② Push the baffle filter upward. ③ Slide forward. ④ Pull downward. ⑤ Fit into place.
11. Repeat until all baffle filters and spacers are resting against oil tunnel. Refer to page 22.

Final Assembly

12. Turn power ON in control panel. Check all lights and fan operation.
13. Make sure to leave this manual for the homeowner.

Figure 5

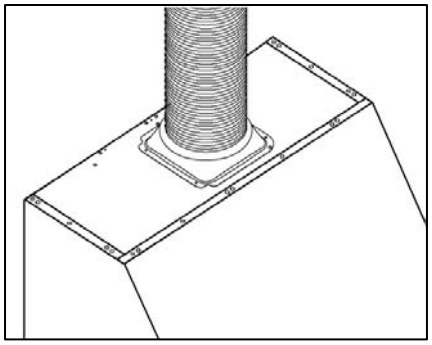

Figure 6

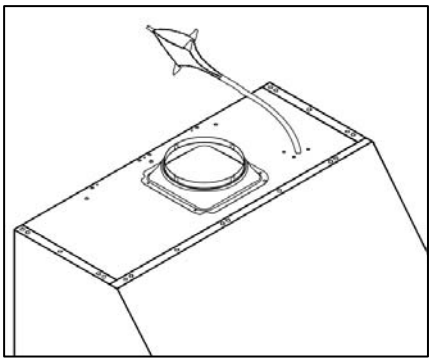

Figure 7

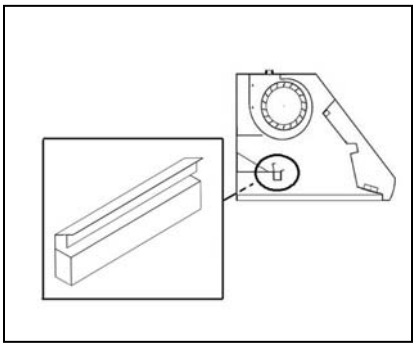

Figure 8

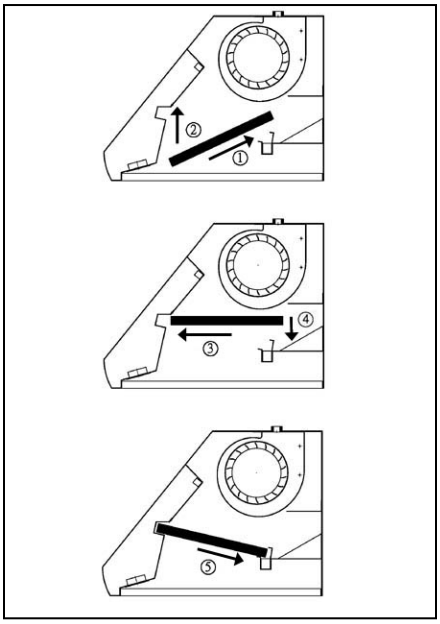

CH-100 SERIES – STAND ALONE INSTALLATION

***This installation only applies with the purchase of an optional duct cover:

Preparation before Installation

NOTE: TO AVOID DAMAGE TO YOUR HOOD, PREVENT DEBRIS FROM ENTERING THE VENT OPENING.

- ♦ Decide the location of the venting pipe from the hood to the outside. Refer to Figure 9.
- ♦ A straight, short venting run will allow the hood to perform more efficiently.
- ♦ Try to avoid as many transitions, elbows, and long run as possible. This may reduce the performance of the hood.
- ♦ Temporarily wire the hood to test for proper operation before installing.
- ♦ **Important: Peel protective film off the hood and the duct cover (if any).**
- ♦ If necessary, prepare back wall frame with cross framing lumber for secure installation.
- ♦ Using references on Table 2 and measurements on page 21-22, decide the level of the lumber. Refer to Figure 10.

Hood Installation

CAUTION: If required to move the cooking range to install the hood, turn off the power on an electric range at the main electrical box. SHUT OFF THE GAS BEFORE MOVING A GAS RANGE.

1. (This step only applies to 42” and 48” models.) Attach exhaust plate on hood with four (3/16” x 3/8”) screws (included). Shown in Figure 11.
2. If necessary, remove the rubber stand on the back of the hood.
3. Use twelve (3/16” x 3/8”) screws (included) to attach the two hood-mounting brackets (included) to the top of the hood.
4. Using references in Table 2 and Measurements and Diagrams on pages 21-22, mark the leveling point of the hood. Position six mounting screws (not included) on the wall, leaving 1/8” away from the wall.

Figure 9

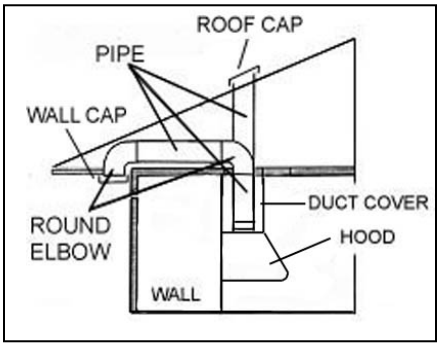

Figure 10

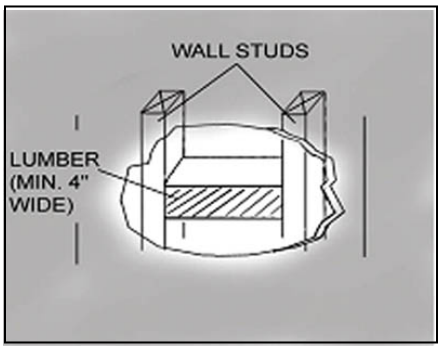

Figure 11

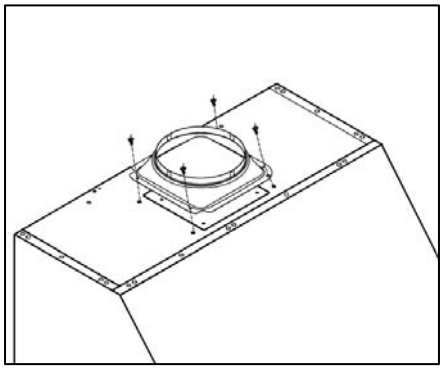

5. Align hood-mounting bracket to the six screws on the wall and hook hood into place. Tighten screws to secure hood to the wall.
6. For safety purpose, pre-drilled mounting holes are provided through the back of the hood. For a more secure installation, use as many mounting holes as needed to secure from the inside of hood (screws not included).

CAUTION: MAKE SURE HOOD IS SECURE BEFORE RELEASING.

Wiring to Power Supply

SAFETY WARNING

RISK OF ELECTRICAL SHOCK. THIS RANGE HOOD MUST BE PROPERLY GROUNDED. MAKE SURE THIS IS DONE BY SPECIALIZED ELECTRICIAN IN ACCORDANCE WITH ALL APPLICABLE NATIONAL AND LOCAL ELECTRICAL CODES. BEFORE CONNECTING WIRES, SWITCH POWER OFF AT SERVICE PANEL AND LOCK SERVICE PANEL TO PREVENT POWER FROM BEING SWITCHED ON ACCIDENTALLY.

7. Connect the electrical wires.
   - Connect three wires (black, white and green) to house wires and cap with wire connectors. Connect according to color: black to black, white to white, and green to green as shown on Figure 12.
   - If necessary to hide the electrical wire connections, push wires back into the wiring box. Access the wire connections underneath the hood. To prevent any damage, make sure wires do not slip between motor or any moving parts.

Figure 12

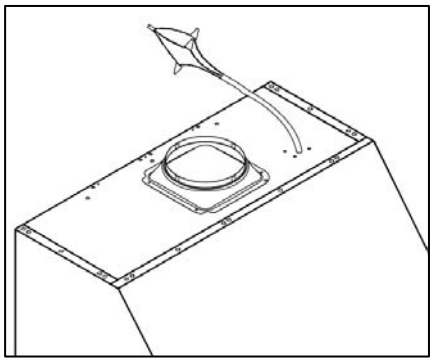

Duct Cover Installation

8. Use 6” round steel pipe for 30” and 36” models or 8” round steel pipe for 42” and 48” models (follow building codes in your area) to connect the exhaust on the hood to the ductwork above. Use duct tape to make all joints secure and air tight. Refer Figure 13. Slide the duct cover onto the hood.
9. Use 3/16” x 3/8” screws (included) to attach duct cover to hood.

Install Accessories

10. Attach oil tunnel. Refer to Figure 14.
11. Refer to Figure 15. ① Slide the baffle filter into the hood. ② Push the baffle filter upward. ③ Slide forward. ④ Pull downward. ⑤ Fit into place.
12. Repeat until all baffle filters and spacers are resting against oil tunnel. Refer to page 20.

Final Assembly

13. Turn power ON in control panel. Check all lights and fan operation.
14. Make sure to leave this manual for the homeowner.

Figure 13

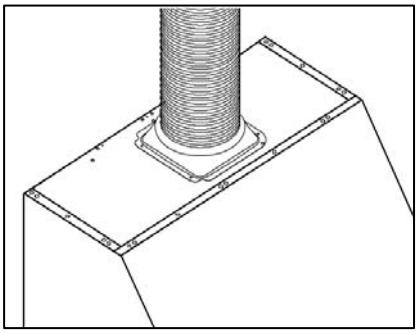

Figure 14

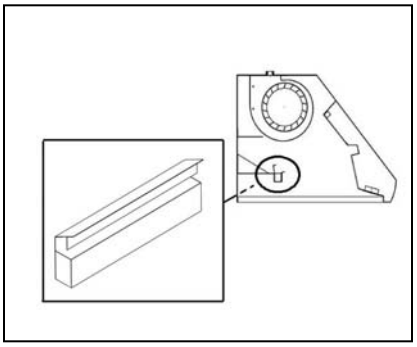

Figure 15

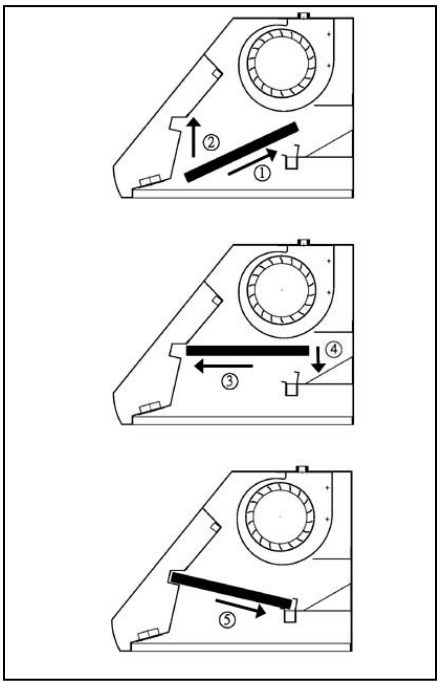

Preparation before Installation

NOTE: TO AVOID DAMAGE TO YOUR HOOD, PREVENT DEBRIS FROM ENTERING THE VENT OPENING.

- Decide the location of the venting pipe from the hood to the outside. (Figure 16)
- A straight, short venting run will allow the hood to perform more efficiently.
- Try to avoid as many transitions, elbows, and long run as possible. This may reduce the performance of the hood.
- Temporarily wire the hood to test for proper operation before installing
- **Important: Peel protective film off the hood and the duct cover (if any).**
- If necessary, prepare back wall frame with cross framing lumber for secure installation. Refer to Table 2 and measurements on Page 23 to decide the level of the lumber. (Figure 17)
- Loosen hood-mounting brackets at the back of the hood, adjust brackets and tighten screws.
- If necessary, remove the rubber stand on the back of the hood. (Figure 18)

Figure 16

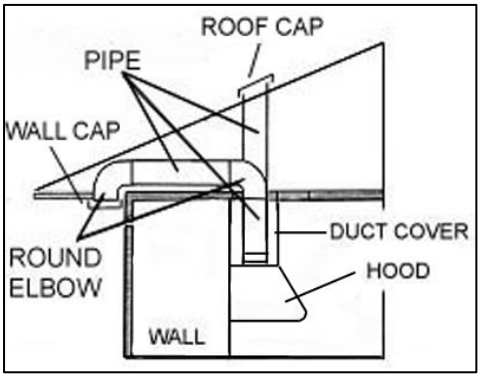

Figure 17

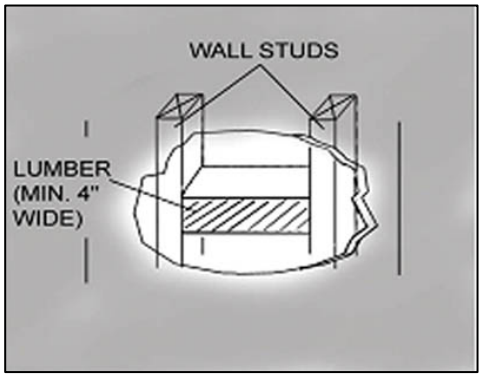

Figure 18

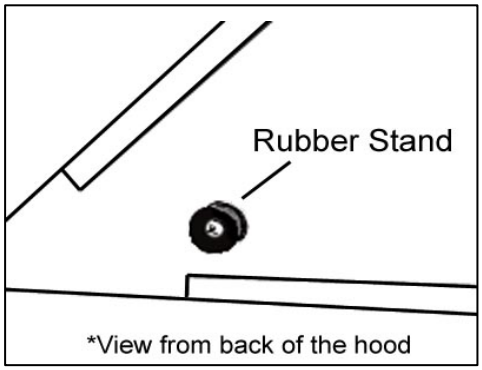

Hood Installation

CAUTION: If required to move the cooking range to install the hood, turn off the power on an electric range at the main electrical box. SHUT OFF THE GAS BEFORE MOVING A GAS RANGE.

1. Using references in Table 2 and measurements on Page 23, mark the leveling locations point for hood-mounting bracket on the wall.
2. Secure two mounting screws (not provided) to the wall, leaving an 1/8” space from the wall.
3. Align the hood-mounting bracket to the mounting screws on the wall and hang hood into place.
4. Secure and tighten the mounting screws.

CAUTION: MAKE SURE HOOD IS SECURE BEFORE RELEASING.

Wiring to Power Supply

SAFETY WARNING

RISK OF ELECTRICAL SHOCK. THIS RANGE HOOD MUST BE PROPERLY GROUNDED. MAKE SURE THIS IS DONE BY SPECIALIZED ELECTRICIAN IN ACCORDANCE WITH ALL APPLICABLE NATIONAL AND LOCAL ELECTRICAL CODES. BEFORE CONNECTING WIRES, SWITCH POWER OFF AT SERVICE PANEL AND LOCK SERVICE PANEL TO PREVENT POWER FROM BEING SWITCHED ON ACCIDENTALLY.

5. Connect the electrical wires.
   - Connect three wires (black, white and green) to house wires and cap with wire connectors. Connect according to color: black to black, white to white, and green to green as shown on Figure 19.
   - If necessary to hide the electrical wire connections, push wires back into the wiring box. Access the wire connections underneath the hood. To prevent any damage, make sure wires do not slip between motor or any moving parts.

Figure 19

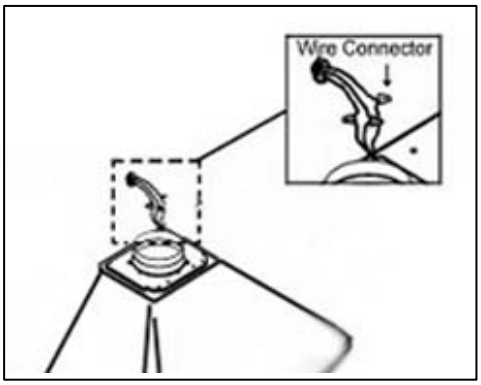

Figure 20

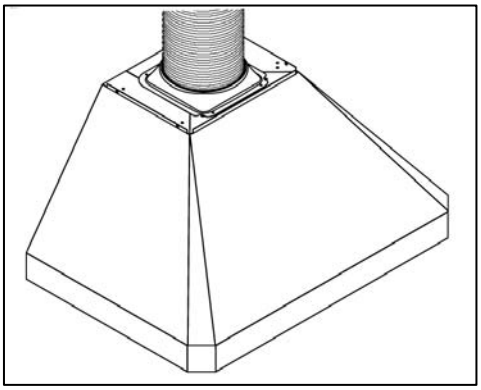

Figure 21

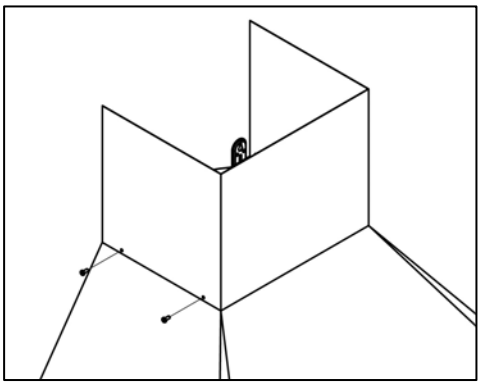

Duct Cover Installation

6. Use 6” round steel pipe for 30” and 36” models or 8” round steel pipe for 42” and 48” models (follow building codes in your area) to connect the exhaust on the hood to the ductwork above. Use duct tape to make all joints secure and air tight. Refer Figure 20.
7. Use four 4mm x 8mm screws (included) to attach duct cover to hood. Refer to Figure 21.

Install Accessories

8. Attach oil tunnel. Refer to Figure 22.
9. Refer to Figure 23. ① Slide the baffle filter into the hood. ② Push the baffle filter upward. ③ Slide forward. ④ Pull downward. ⑤ Fit into place.
10. Repeat until all baffle filters and spacers are resting against oil tunnel. Refer to page 23.

Final Assembly

11. Turn power ON in control panel. Check all lights and fan operation.
12. Make sure to leave this manual for the homeowner.

Figure 22

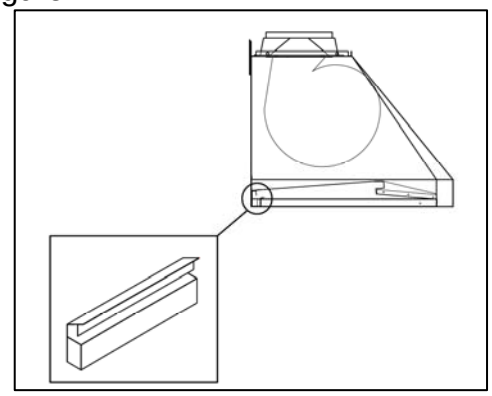

Figure 23

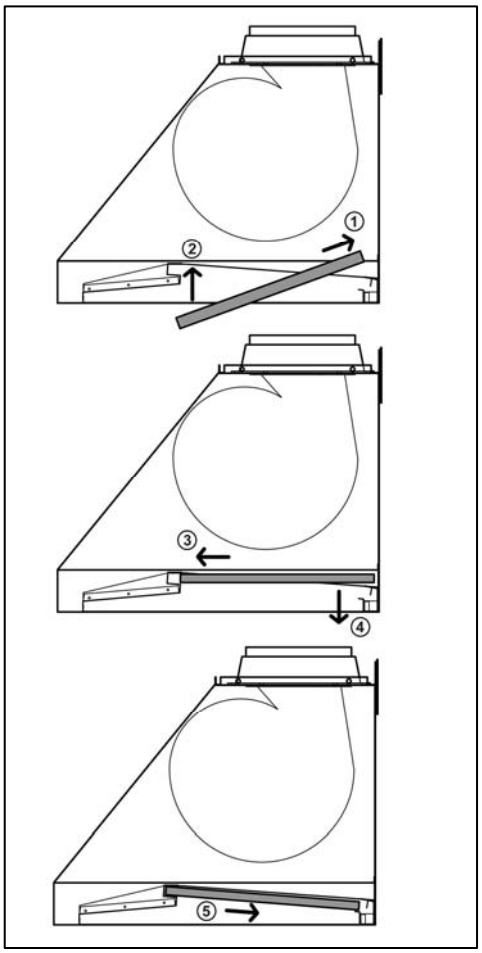

OPERATION INSTRUCTIONS

This KOBE hood is equipped with two rotary controls with powerful centrifugal squirrel cage, baffle filters, and bright LED lights.

The two rotary controls are Light Control & Speed Control. Refer to Figure 28.

Figure 28

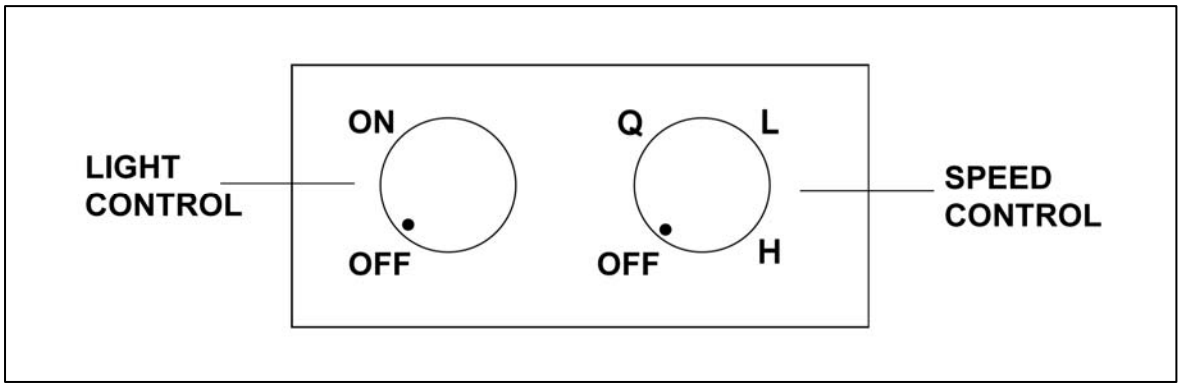

Note: For best results, turn hood to QuietMode™ prior to preparation or cooking to establish airflow in the kitchen. Adjust speed as needed.

- **Rotate the Speed Control clockwise to cycle from QuietMode™, Low, High, and Off; and rotate counterclockwise to cycle from High, Low, QuietMode™, and off**
- **Rotate the Light Control clockwise to turn on the light.**

MAINTENANCE

For the optimal level of operation, clean the range hood surface and baffles regularly.

To Clean Hood Surface

CAUTION: NEVER USE ABRASIVE CLEANERS, PADS, OR CLOTHS.

*** Regular care will help preserve its fine appearance.

1. Use only mild soap or detergent solutions. Dry surfaces using soft cloth.
2. If hood looks splotchy (stainless steel hood), use an orange base cleaner to clean the surface of the hood. Avoid cleaner to get on the control switches. Only spread a light coating over the surface of the hood and leave on for a few minutes (do not leave on too long or this may cause damage to hood finish). Use soft towel to wipe off the cleaning solution, gently rubs any stubborn spots. Use a slightly damp towel to get rid of any cleaning solution. Use dry soft towel to dry the hood.
3. To bring the glow back into a stainless steel finish, use a stainless steel cleaner.
4. DO NOT allow deposits to remain for long periods of time.
5. DO NOT use ordinary steel wool or steel brushes. Small bits of steel may adhere to the surface causing rust.
6. DO NOT allow salt solutions, disinfectants, bleaches, or cleaning compounds to remain in contact with stainless steel for extended periods. Many of these compounds contain chemicals, which may be harmful. Rinse with water after exposure and wipe dry with a clean cloth.

To Clean Baffle Filters & Oil Tunnel

CAUTION: DRAIN BAFFLE FILTERS AND OIL TUNNEL BEFORE OIL WILL OVERFLOW.

1. Remove the baffle filters and oil tunnel.
2. Using a sponge, wash with warm soapy water. Dry completely before returning into place.
   (Note: Baffle Filters are top rack dishwasher safe.)

SPECIFICATIONS

CH-100 Series

MODEL / SIZE	CH0030SQB-1 / 30” / Single Blower CH0036SQB-1 / 36" / Single Blower CH0042SQB-1 / 42” / Dual Blowers CH0048SQB-1 / 48” / Dual Blowers
COLOR	Commercial Grade Stainless Steel
CONSUMPTION / AMPERE	CH0030SQB-1 – 320W / 2.86A CH0036SQB-1 – 320W / 2.86A CH0042SQB-1 – 350W / 3A CH0048SQB-1 – 350W / 3A
VOLTAGE	120V 60Hz
NUMBER OF BLOWER	1 – 30”, 36” 2 – 42”, 48”
DESIGN	18-Gauge Seamless / Satin Finish
FAN TYPE: CENTRIFUGAL	Squirrel Cage
EXHAUST	Top 6” Round – 30”, 36” Top 8” Round – 42”, 48”
CONTROLS	Rotary Switch
LIGHTS	3-Watt LED x 2 – 30”, 36” 3-Watt LED x 3 – 42”, 48”
HOOD DIMENSION (W x D x H)	(CH0030SQB-1) 29-3/4” x 24” x 18” (CH0036SQB-1) 35-3/4” x 24” x 18” (CH0042SQB-1) 41-3/4” x 24” x 18” (CH0048SQB-1) 47-3/4” x 24” x 18”
OPTIONAL ACCESSORIES (W x D x H)	**1) Duct Cover:** **Model No. CH0030DC-12** (30” x 12” x 12”) **Model No. CH0036DC-12** (36” x 12” x 12”) **Model No. CH0042DC-12** (42” x 12” x 12”) **Model No. CH0048DC-12** (48” x 12” x 12”) **2) Model No. SSP30** 30” Stainless Steel Back Panel (30” x 1/10” x 32”) **3) Model No. SSP36** 36” Stainless Steel Back Panel (36” x 1/10” x 32”)

	Net	Gross
HOOD WEIGHT (lbs)		
(CH0030SQB-1)	70	85
(CH0036SQB-1)	75	93
(CH0042SQB-1)	108	128
(CH0048SQB-1)	112	135

SPEED		**QuietMode™**	**Low**	**High**
SINGLE BLOWER				
CH0030SQB-1	**Air Capacity (cfm)**	300	580	760
CH0036SQB-1	**Sone***	1.8	4.7	5.4
DUAL BLOWERS				
CH0042SQB-1	**Air Capacity (cfm)**	450	800	1200
CH0048SQB-1	**Sone***	2.5	6.0	8.0

*One sone is equivalent to the sound of a refrigerator at 40 decibels.
**Specifications subject to change without notice.

RA-02 Series

MODEL / SIZE	RA0230SQB-1 / 30” / Single Blower RA0236SQB-1 / 36" / Single Blower RA0242SQB-1 / 42” / Dual Blowers RA0248SQB-1 / 48” / Dual Blowers
COLOR	Commercial Grade Stainless Steel
CONSUMPTION / AMPERE	RA0230SQB-1 – 320W / 2.86A RA0236SQB-1 – 320W / 2.86A RA0242SQB-1 – 350W / 3A RA0248SQB-1 – 350W / 3A
VOLTAGE	120V 60Hz
NUMBER OF BLOWER	1 – 30”, 36” 2 – 42”, 48”
DESIGN	18-Gauge Seamless / Satin Finish
FAN TYPE: CENTRIFUGAL	Squirrel Cage
EXHAUST	Top 6” Round – 30”, 36” Top 8” Round – 42”, 48”
CONTROLS	Rotary Switch
LIGHTS	3-Watt LED x 2 – 30”, 36” 3-Watt LED x 3 – 42”, 48”
HOOD DIMENSION (W x D x H)	(RA0230SQB-1) 29-3/4” x 24” x 18” (RA0236SQB-1) 35-3/4” x 24” x 18” (RA0242SQB-1) 41-3/4” x 24” x 18” (RA0248SQB-1) 47-3/4” x 24” x 18”
OPTIONAL ACCESSORIES (W x D x H)	**1) Model No. RA02DC-24** 1-Piece Extension Duct Cover (15” x 12” x 24-1/2”) **2) Model No. SSP30** 30” Stainless Steel Back Panel (30” x 1/10” x 32”) **3) Model No. SSP36** 36” Stainless Steel Back Panel (36” x 1/10” x 32”)

		Net	Gross
HOOD WEIGHT (lbs)	**(RA0230SQB-1)**	46	66
	(RA0236SQB-1)	53	73
	(RA0242SQB-1)	65	87
	(RA0248SQB-1)	72	94
	RA02DC	5	7

SPEED		**QuietMode™**	**Low**	**High**
SINGLE BLOWER				
RA0230SQB-1	**Air Capacity (cfm)**	300	580	760
RA0236SQB-1	**Sone***	1.8	4.7	5.4
DUAL BLOWERS				
RA0242SQB-1	**Air Capacity (cfm)**	450	800	1200
RA0248SQB-1	**Sone***	2.5	6.0	8.0

*One sone is equivalent to the sound of a refrigerator at 40 decibels.
**Specifications subject to change without notice.

MEASUREMENTS & DIAGRAMS

- **All measurements in ( ) are millimeters.**
- **All inch measurements are converted from millimeters. Inch measurements are estimated.**

CH-100 Series
MODEL NO.: CH0030SQB-1 (30”)
CH0036SQB-1 (36”)
CH0042SQB-1 (42”)
CH0048SQB-1 (48”)

- FOR UNDER THE CABINET -

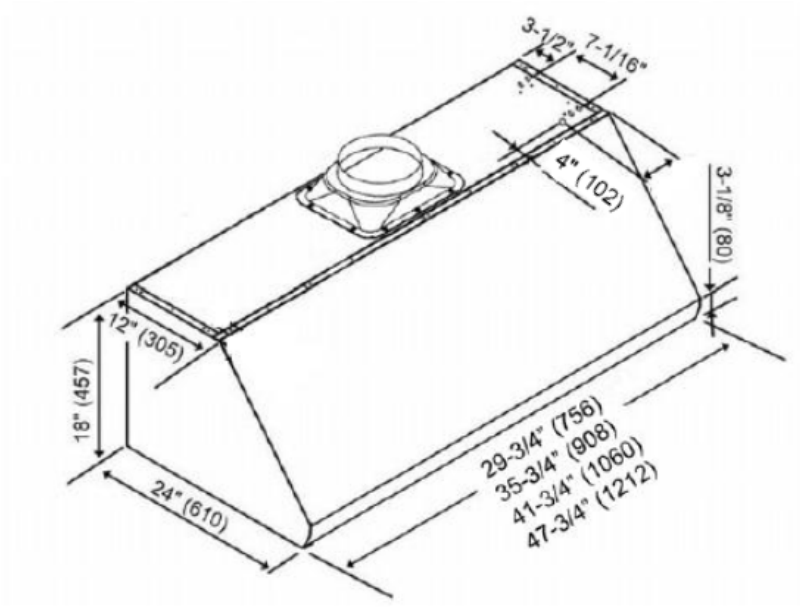

- FOR STAND ALONE -

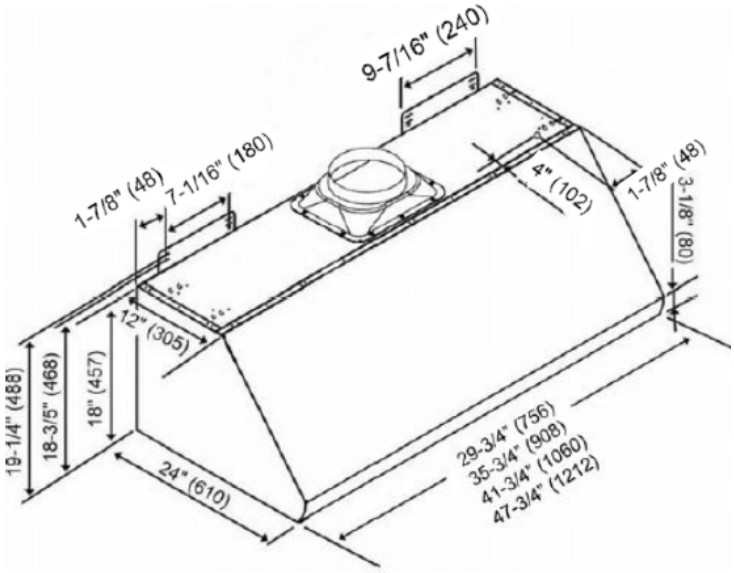

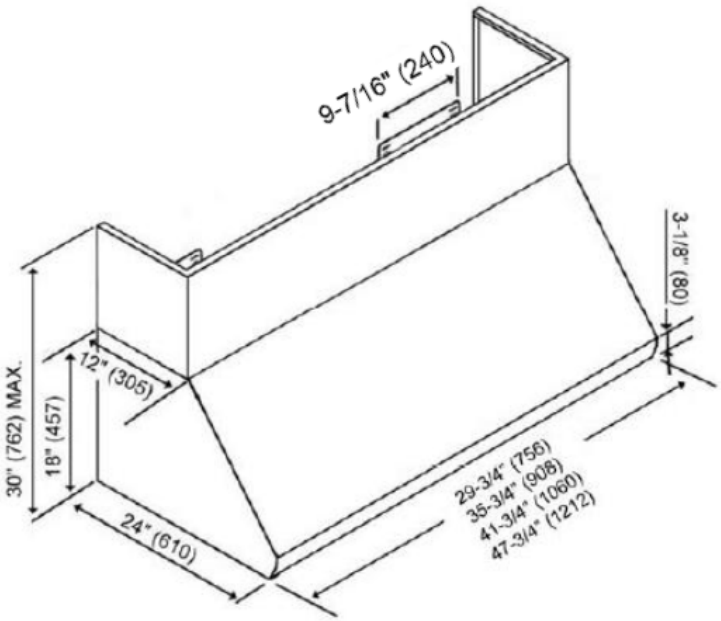

- FOR STAND ALONE (WITH OPTIONAL DUCT COVER) -

CH-100 Series
MODEL NO.: CH0030SQB-1 (30”)
CH0036SQB-1 (36”)
CH0042SQB-1 (42”)
CH0048SQB-1 (48”)

***Hood-Mounting Bracket

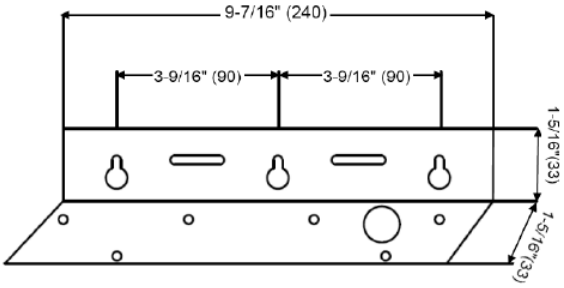

Baffle Filters & Stainless Steel Spacer

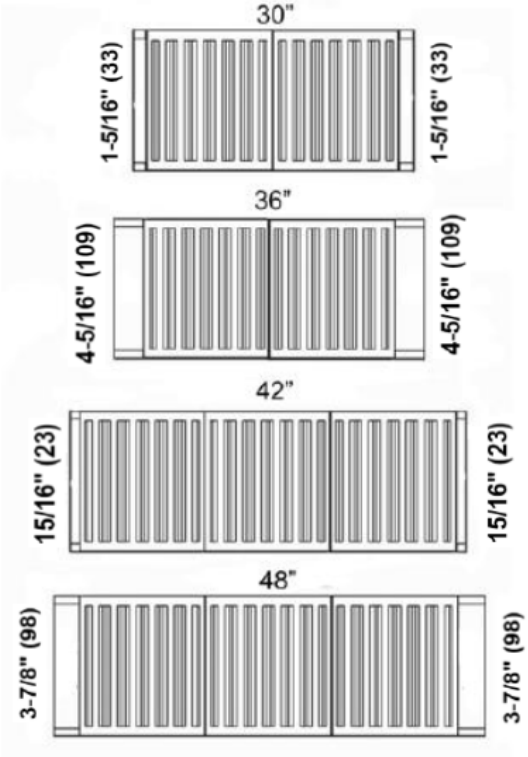

- **All measurements in ( ) are millimeters.**
- **All inch measurements are converted from millimeters. Inch measurements are estimated.**

RA-02 Series
MODEL NO.: RA0230SQB-1 (30”)
RA0236SQB-1 (36”)
RA0242SQB-1 (42”)
RA0248SQB-1 (48”)

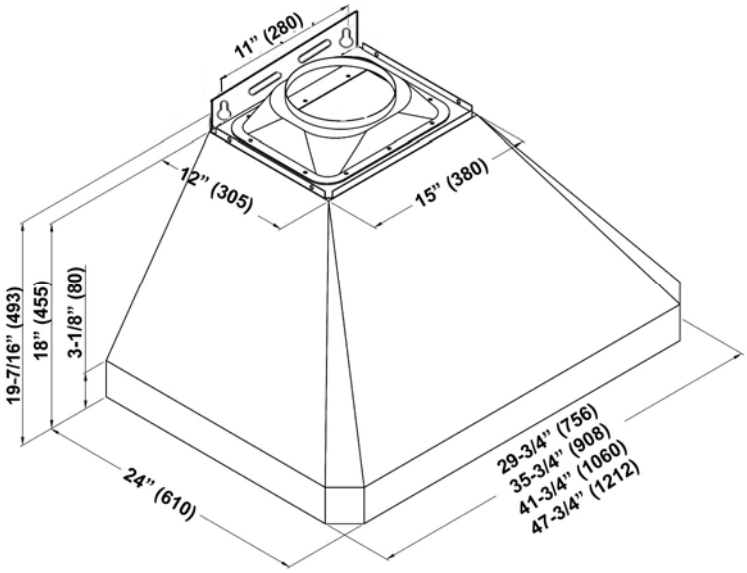

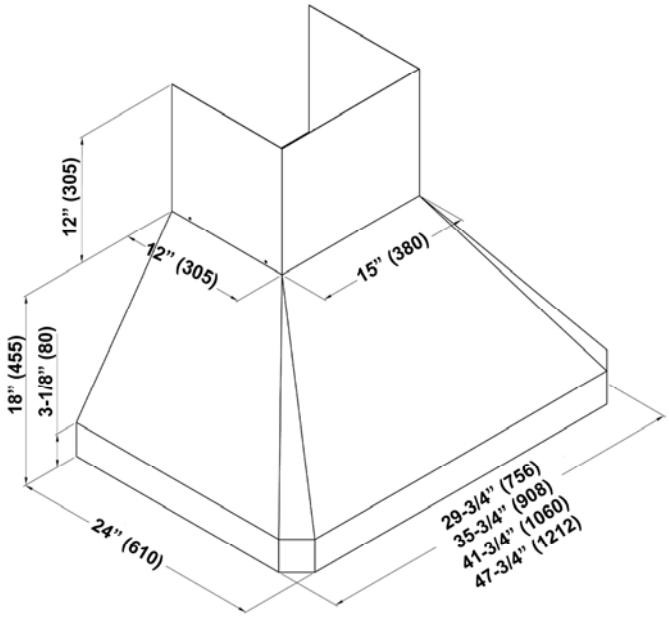

BAFFLE FILTERS & BOTTOM CASINGS

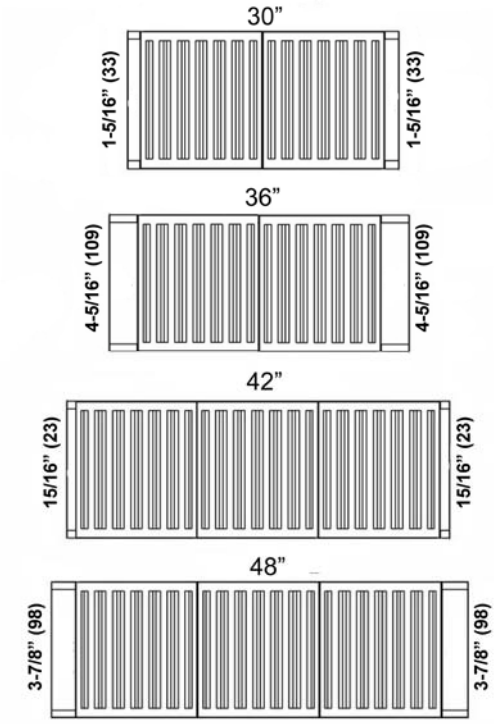

PARTS LIST

CH-100 Series
MODEL NO.: CH0030SQB-1 (30”)
CH0036SQB-1 (36”)
CH0042SQB-1 (42”)
CH0048SQB-1 (48”)

NO.	DESCRIPTION	MODEL /SIZE	PART NO.
1	Screw (3/16” x 3/8”)		L1-0707-0002
2	Hood Mounting Bracket		L1-0221-1630
3	6” Round Plastic Exhaust	CH0030SQB-1 / CH0036SQB-1	L1-0505-0001
	8” Round Exhaust Plate	CH0042SQB-1 / CH0048SQB-1	L1-0242-3630
4	Air Chamber & Motor	CH0030SQB-1 / CH0036SQB-1	L1-0302-0120-802SS
		CH0042SQB-1 / CH0048SQB-1	L1-0302-0120-802S
5	LED Light		L1-0403-0301
6	Metal Oil Tunnel	CH0030SQB-1	B101-9130-15
		CH0036SQB-1	B101-9136-15
		CH0042SQB-1	B101-9142-15
		CH0048SQB-1	B101-9148-15
7	LED Driver		L1-0402-D001
8	Capacitor		L1-0401-0120-24
9	Valve Stem		L1-0405-0404-B
10	Knob		L1-0405-0400-A
11	Baffle Filter		L1-0214-0191
12	Spacer		
A	1-5/16” wide	CH0030SQB-1	B101-2130-09
B	4-5/16” wide	CH0036SQB-1	B101-2136-09
C	15/16” wide	CH0042SQB-1	B101-2142-09
D	3-7/8” wide	CH0048SQB-1	B101-2148-09

(Optional Duct Cover)

ORIGINAL KIT			
NO.	**DESCRIPTION**	**MODEL /SIZE**	**PART NO.**
01	Duct Cover	CH0030DC-12	B102-0030-12
		CH0036DC-12	B102-0036-12
		CH0042DC-12	B102-0042-12
		CH0048DC-12	B102-0048-12
02	Screw (3/16” x 3/8”)		L1-0707-0002

CH-100 Series
MODEL NO.: CH0030SQB-1 (30”)
CH0036SQB-1 (36”)

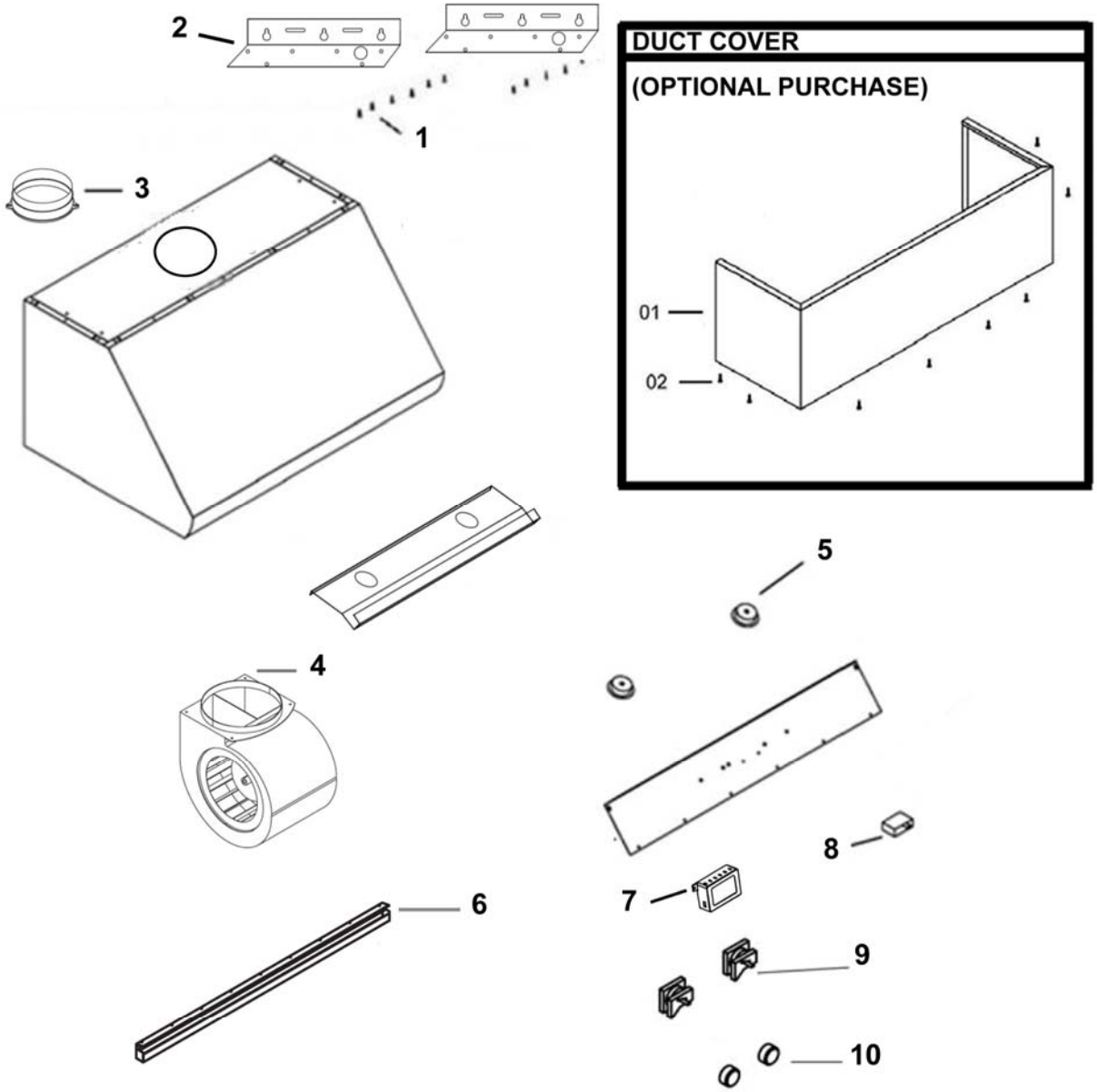

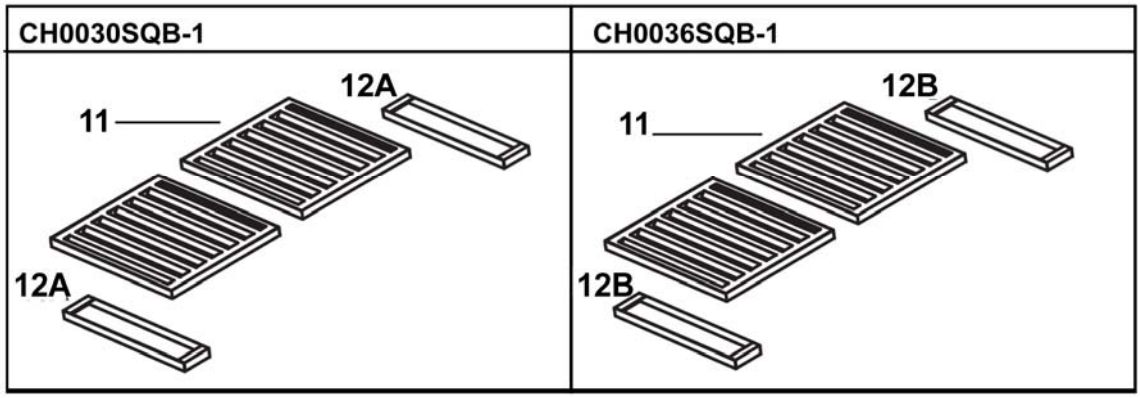

CH-100 Series
MODEL NO.: CH0042SQB-1 (42”)
CH0048SQB-1 (48”)

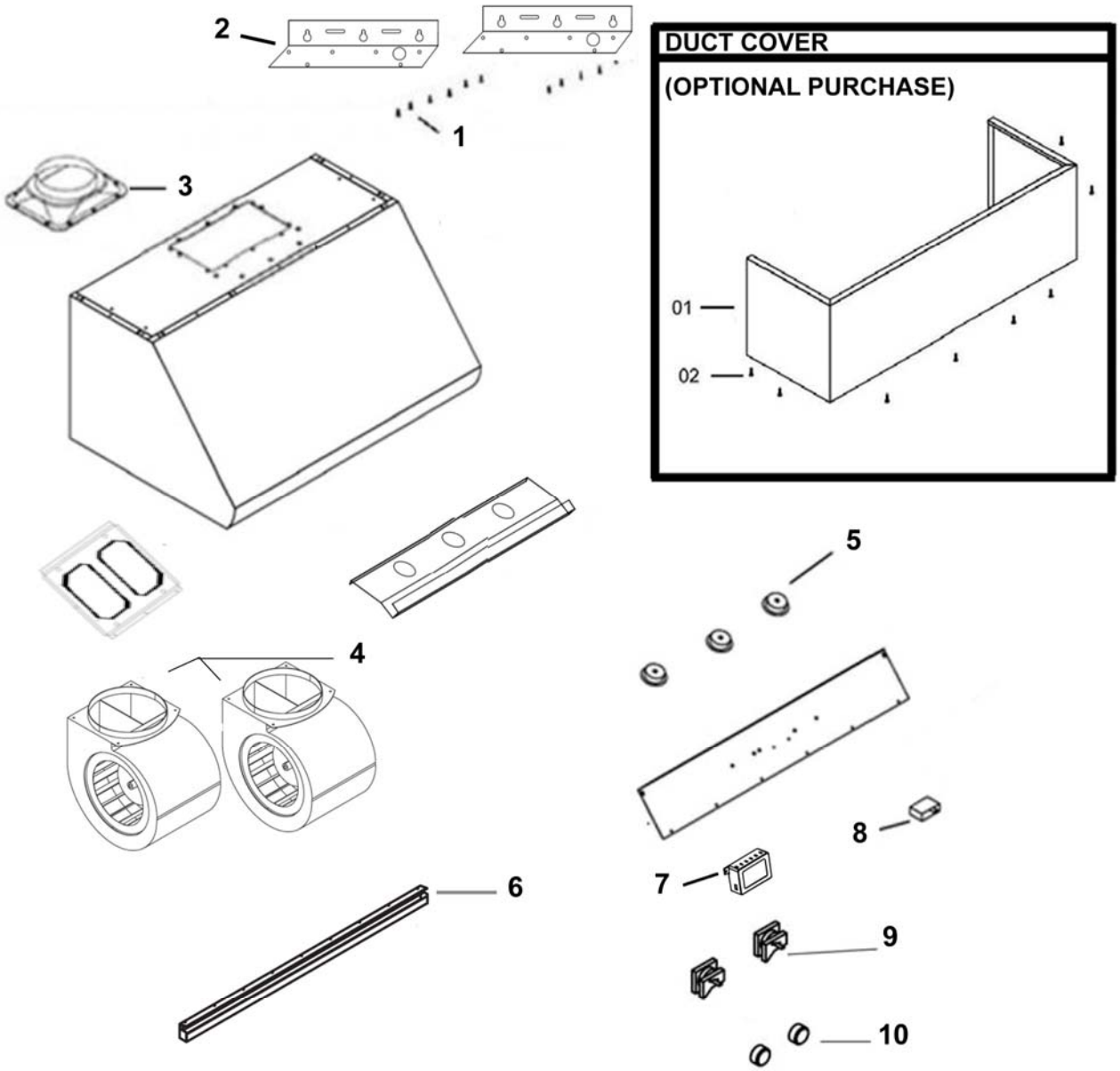

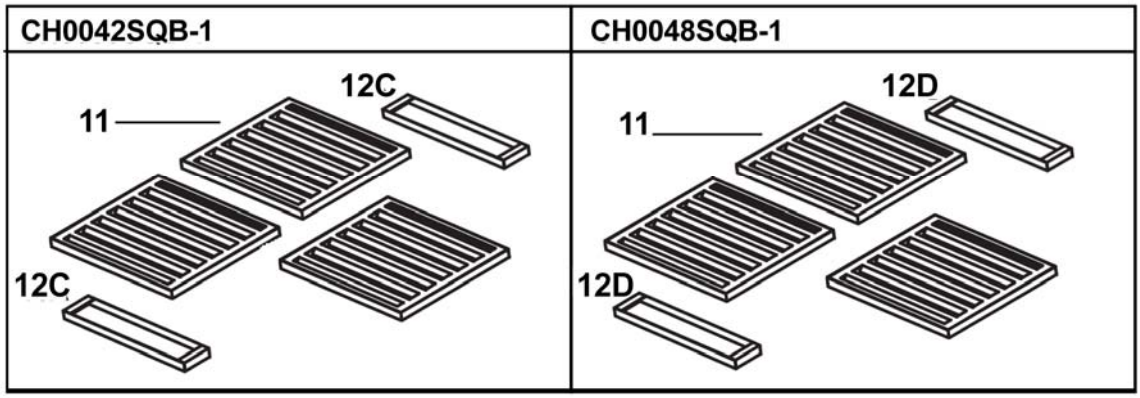

RA-02 Series

MODEL NO.: RA0230SQB-1 (30”)
RA0236SQB-1 (36”)
RA0242SQB-1 (42”)
RA0248SQB-1 (48”)

NO.	DESCRIPTION	MODEL /SIZE	PART NO.
1	6” Round Plastic Exhaust	RA0230SQB-1 / RA0236SQB-1	L1-0505-0001
	8” Round Exhaust Plate	RA0242SQB-1 / RA0248SQB-1	L1-0242-3630
2	Duct Cover	RA02DC	12-02000-012-61
3	Hood Mounting Bracket	RA0230SQB-1 / RA0236SQB-1	L1-0201-0230
		RA0242SQB-1 / RA0248SQB-1	L1-0201-0242
4	LED Light		L1-0403-0301
5	Valve Stem		L1-0405-0404-B
6	Knob		L1-0405-0400-A
7	Capacitor		L1-0401-0120-24
8	LED Driver		L1-0402-D001
9	Air Chamber & Motor	RA0230SQB-1 / RA0236SQB-1	L1-0302-0120-802SS
		RA0242SQB-1 / RA0248SQB-1	L1-0302-0120-802S
10	Oil Tunnel	RA0230SQB-1	B101-9130-14
		RA0236SQB-1	B101-9136-14
		RA0242SQB-1	B101-9142-14
		RA0248SQB-1	B101-9148-14
11	Baffle Filter		L1-0214-0191
12	Spacer		
A	1-5/16” wide	RA0230SQB-1	B101-9130-15
B	4-5/16” wide	RA0236SQB-1	B101-9136-15
C	15/16” wide	RA0242SQB-1	B101-9142-15
D	3-7/8” wide	RA0248SQB-1	B101-9148-15

RA-02 Series
MODEL NO.: RA0230SQB-1 (30”)
RA0236SQB-1 (36”)

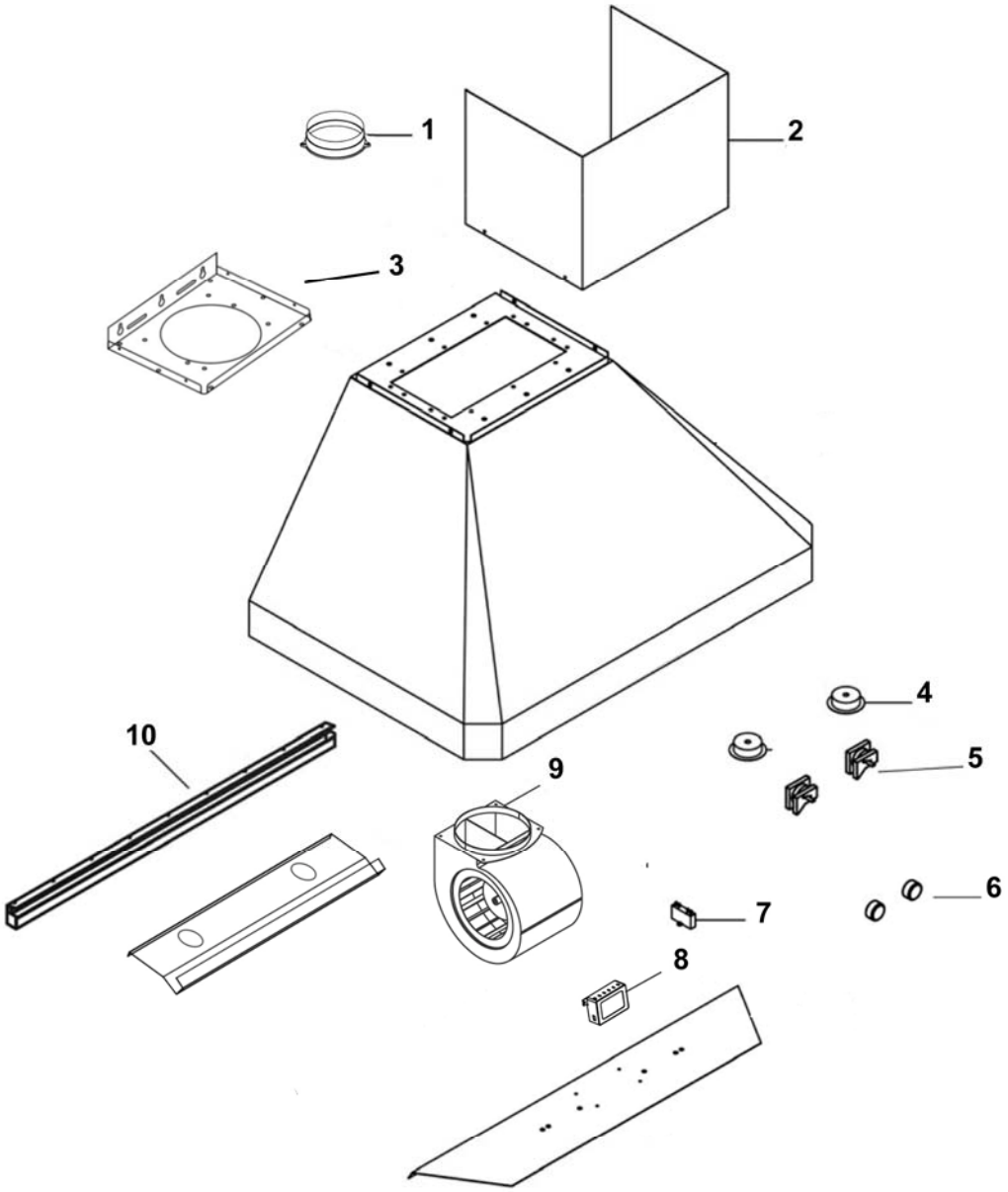

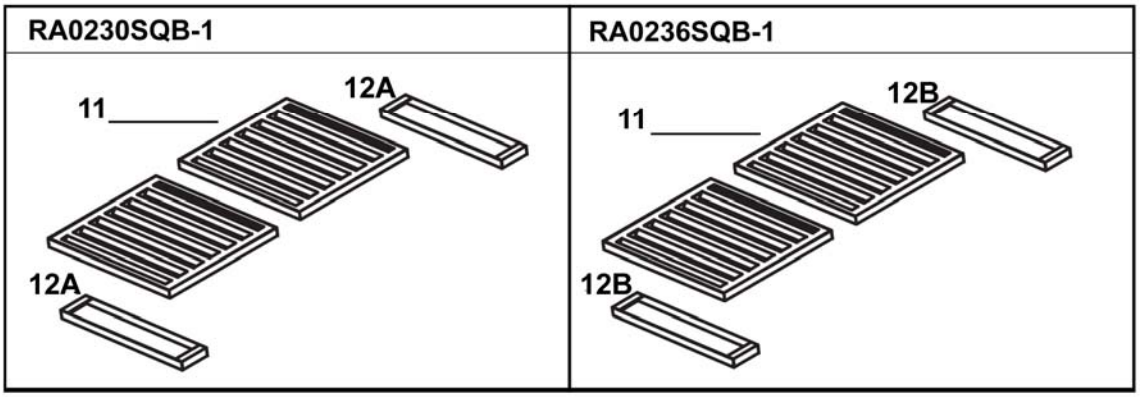

RA-02 Series

MODEL NO.: RA0242SQB-1 (42”)
RA0248SQB-1 (48”)

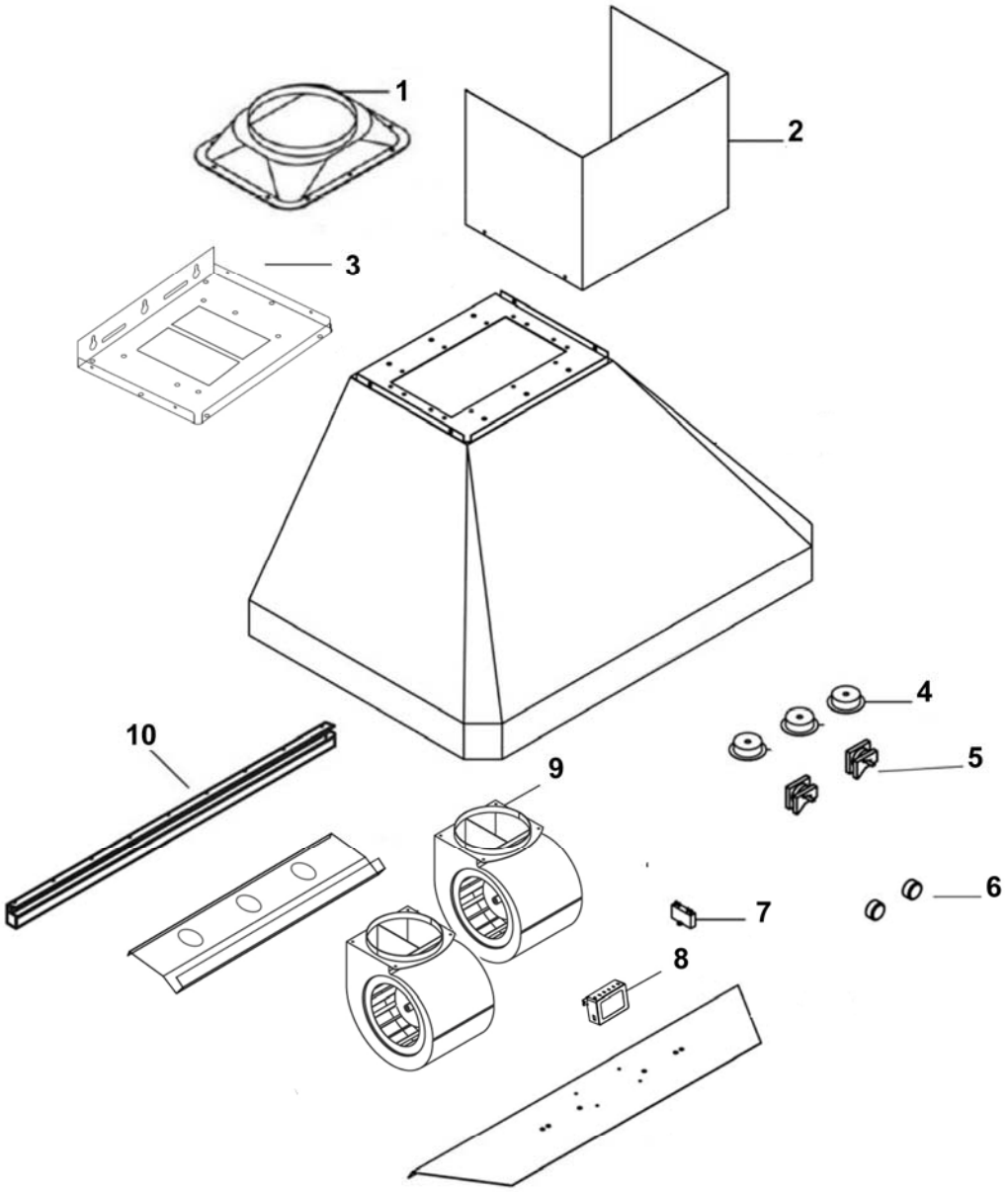

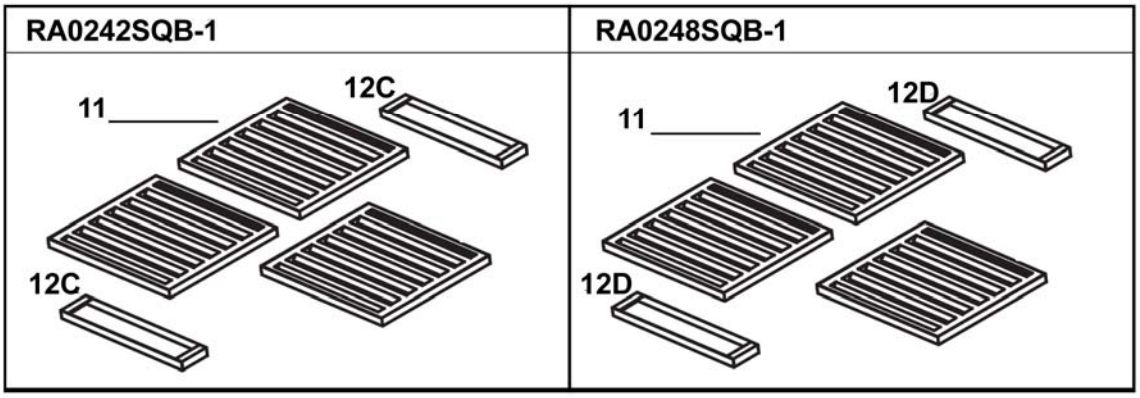

CIRCUIT DIAGRAM

CH-100 Series
MODEL NO.: CH0030SQB-1 (30”)
CH0036SQB-1 (36”)
CH0042SQB-1 (42”)
CH0048SQB-1 (48”)

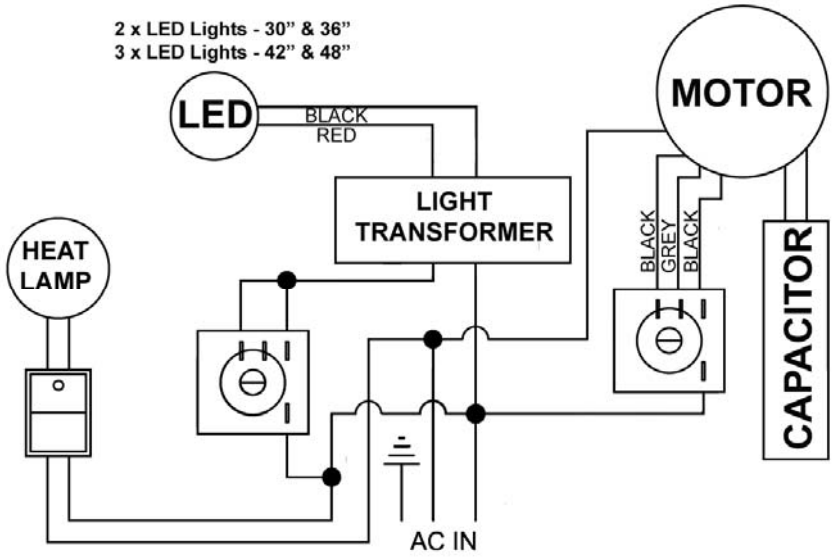

RA-02 Series
MODEL NO.: RA0230SQB-1 (30”)
RA0236SQB-1 (36”)
RA0242SQB-1 (42”)
RA0248SQB-1 (48”)

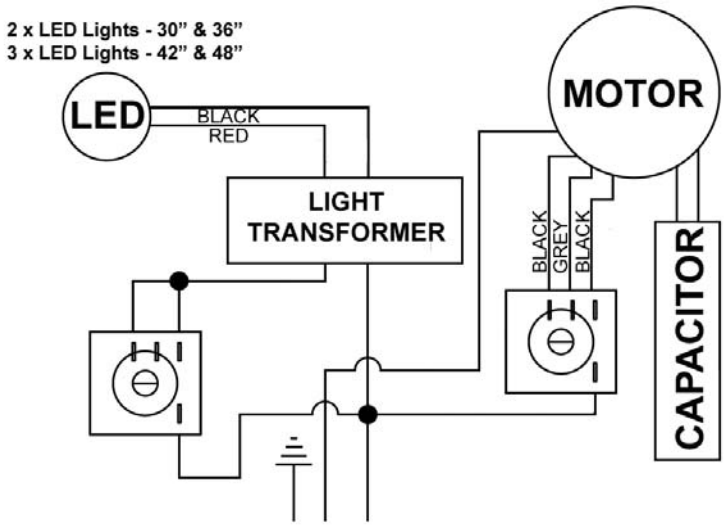

TROUBLE SHOOTING

Issue	Possible Cause	Solution
After Installation, both motors and lights are not working.	The power is not on.	Make sure the circuit breaker and the unit's power is ON. Use a voltage meter to check the power supply.
	The wire connection is not secure.	Check and tighten wire connection.
	The control panel is defective.	Replace the control panel.
Lights are working, but motor(s) is not.	The motor(s) is defective.	Replace the motor.
	The capacitor(s) is defective.	Replace capacitor(s).
	The control panel is defective.	Replace the control panel.
The range hood is vibrating.	The blower system is not secure.	Tighten the turbine impeller/squirrel cage and air chamber.
	The squirrel cage is not balanced.	Replace the squirrel cage.
	Hood is not secured in place.	Check the installation of hood, tighten the mounting bracket.
The motor is working, but the lights are not working.	LED Light(s) is defective.	Replace the LED light.
	The light wiring(s) is loose.	Check wire continuity from light transformer to LED light housing(s).
	Light transformer is defective.	Check power input and power output on the light transformer. If it's needed, replace the light transformer.
	The control panel is defective.	Replace the control panel.
The range hood is not venting out correctly.	The range hood is installed outside of the manufacture recommended clearance.	Adjust the clearance between the range hoods and cook top to 27" to 30". For Island range hood, the clearance between the range hoods and cook top is 30" to 36".
	There is no make-up air inside the house.	Open the window to enhance the performance of the range hood by creating a sufficient make-up air.
	Obstacle blocking the pipe work.	Remove all obstacles from the duct work.
	The pipe size is smaller than the suggested pipe size.	Change the ducting according to the manufacture suggestion.
Cold air is coming into the home.	The pipe connection is not properly sealed.	Check the pipe installation.
	The damper is not properly installed or is missing from the installation.	Check the damper installation.
	The damper is not installed.	By installing the damper, it will help to eliminate air backflow.

WARRANTY

WARRANTY CERTIFICATE

KOBE Range Hoods (referred to herein as “we” or “us”) warrants to the original purchaser (referred to herein as “you” or “your”) all products manufactured or supplied by us to be free from defect in workmanship and materials as follows:

TWO-YEAR LIMITED WARRANTY FOR PARTS AND LABOR ON KOBE PREMIUM SERIES:
For two years from the date of your original invoice from a KOBE authorized dealer, we will, at our sole discretion, choose to repair or replace the product free of charge that failed due to manufacturing defects.

It is your sole responsibility to ensure the product is readily accessible for the service technician to perform repairs. **The service technician will not, under any circumstance, remove, alter or modify any fixture built around and/or connected to the product to gain access to perform repairs.**

During the two-year Limited Warranty period, additional charges may apply which include but are not limited to:

- Service technician travel charges if the requested service location is 30-miles out of KOBE’s authorized service area
- Parts shipping expenses
- Un-installation of defective product and Installation of replacement product

ONE-YEAR LIMITED WARRANTY FOR PARTS ON KOBE BRILLIA SERIES:
For one year from the date of your original invoice from a KOBE authorized dealer, we will provide, free of charge, parts to replace those that failed due to manufacturing defects. It is our sole discretion to choose to repair or replace defective parts. It is your sole responsibility for all labor costs associated with this warranty.

Warranty Exclusions:
This warranty does not cover, including but not limited to the following:

a. Improper installation.
b. Any repair, alteration, modification not authorized by KOBE.
c. Duct alteration, modification and connection.
d. Incorrect electric current, voltage or wiring.
e. Normal maintenance and service required for the product.
f. Consumable parts such as light bulbs and carbon filters.
g. Improper usage of the product that it is not intended for, such as commercial use, outdoor use and multi-family use.
h. Normal wear and tear.
i. Chips, scratches or dents by abuse or misuse of the product.
j. Damages caused by accident, fire, flood and other Acts of God.
k. Expenses incurred for service located outside of the designated service area.
l. Purchases from unauthorized dealers.
m. Removal fees of defective product and Installation fees associated with replacement product.

If we determine that the warranty exclusions listed above apply or if you fail to provide all necessary documentation for warranty service, you will be responsible for all expenses associated with the requested service, including parts, labor, shipping, travelling and any other expense related to the service request.

To qualify for warranty service, you must:

1. Have the **ORIGINAL** proof of purchase
2. Be the **ORIGINAL** purchaser of the product
3. Have the model number
4. Have the serial number
5. Have a description of the nature of any defect in the product or part

TO REQUEST WARRANTY SERVICE, PLEASE CONTACT THE KOBE RANGE HOODS SERVICE CENTER:

KOBE SERVICE CENTER
Tel: 1-855-800-KOBE (5623)
E-mail: kobe@adcoservice.com

WARRANTY INFORMATION FORM

Fill in the blanks and keep this paper with the **original invoice** in a safe place for future service purpose.

1. Date of purchase : _____
2. Model No. : _____
3. Serial No. : _____

For warranty service or spare parts purchase contact:
KOBE Service Center
Toll Free: 1-855-800-KOBE (5623)
Email: kobe@adcoservice.com

To report a problem, please contact:
Toll Free: 1-877-BUY-KOBE (289-5623)
Email: customer.service@koberangehoods.com

For product information contact:
Toll free: 1-877-BUY-KOBE (289-5623)
Email: info@koberangehoods.com

Your notes:

KOBE Range Hoods
11775 Clark Street
Arcadia, CA 91006 USA

http://www.KOBERangeHoods.com

This KOBE hood is made for use in the USA and CANADA only. We do not recommend using this hood overseas as the power supply may not be compatible and may violate the electrical code of that country. **Using a KOBE hood overseas is at your own risk and will void your warranty.**

Information subject to change without notice.

VER.131008